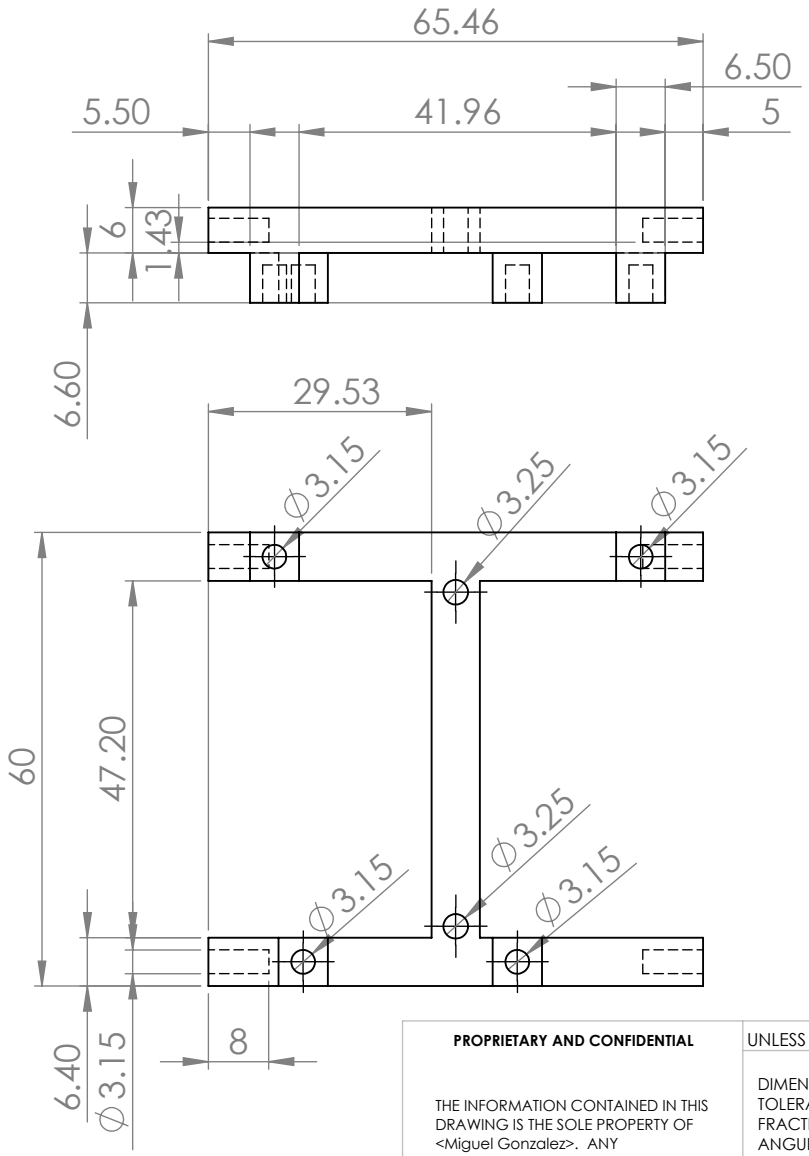

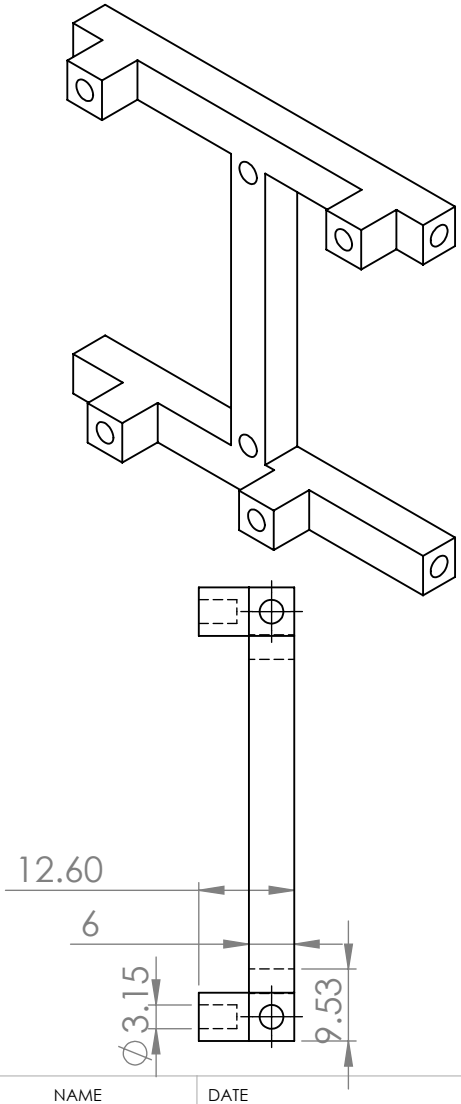

PROPRIETARY AND CONFIDENTIAL THE INFORMATION CONTAINED IN THIS DRAWING IS THE SOLE PROPERTY OF <Miguel Gonzalez>. ANY REPRODUCTION IN PART OR AS A WHOLE is allowed through fair use-creative commons- Attribution-non-comercial license.	UNLESS OTHERWISE SPECIFIED: DIMENSIONS ARE IN INCHES TOLERANCES: FRACTIONAL ± ANGULAR: MACH ± BEND ± TWO PLACE DECIMAL ± THREE PLACE DECIMAL ±		NAME	DATE 4/03/2018
		DRAWN	Miguel Gonzalez	TITLE:
		CHECKED		Micro FOBO
		ENG APPR.		
		MFG APPR.		
	INTERPRET GEOMETRIC TOLERANCING PER:	Q.A.		
	MATERIAL Carbon Fiber PLA	COMMENTS:		SIZE A / DWG. NO. Electronics Frame / REV 2
	FINISH			
APPLICATION	DO NOT SCALE DRAWING			SCALE: 1:1 / WEIGHT: / SHEET 1 OF 1

SOLIDWORKS Educational Product. For Instructional Use Only.